CSE 4303
Data Structures

Topic: Hashing

Sabbir Ahmed
Assistant Prof | CSE | IUT
sabbirahmed@iut-dhaka.edu

Hash table

- *Hash table* (or hash map) stores key-value pairs in an array-like format for fast data retrieval.

Hash table

- *Hash table* (or hash map) stores key-value pairs in an array-like format for fast data retrieval.
- It uses a *hash function* to compute an index used to store in the hash table or to find the value.

Hash table

- *Hash table* (or hash map) stores key-value pairs in an array-like format for fast data retrieval.
- It uses a *hash function* to compute an index used to store in the hash table or to find the value.
- Hash table provides average $O(1)$ *insertions and search.*

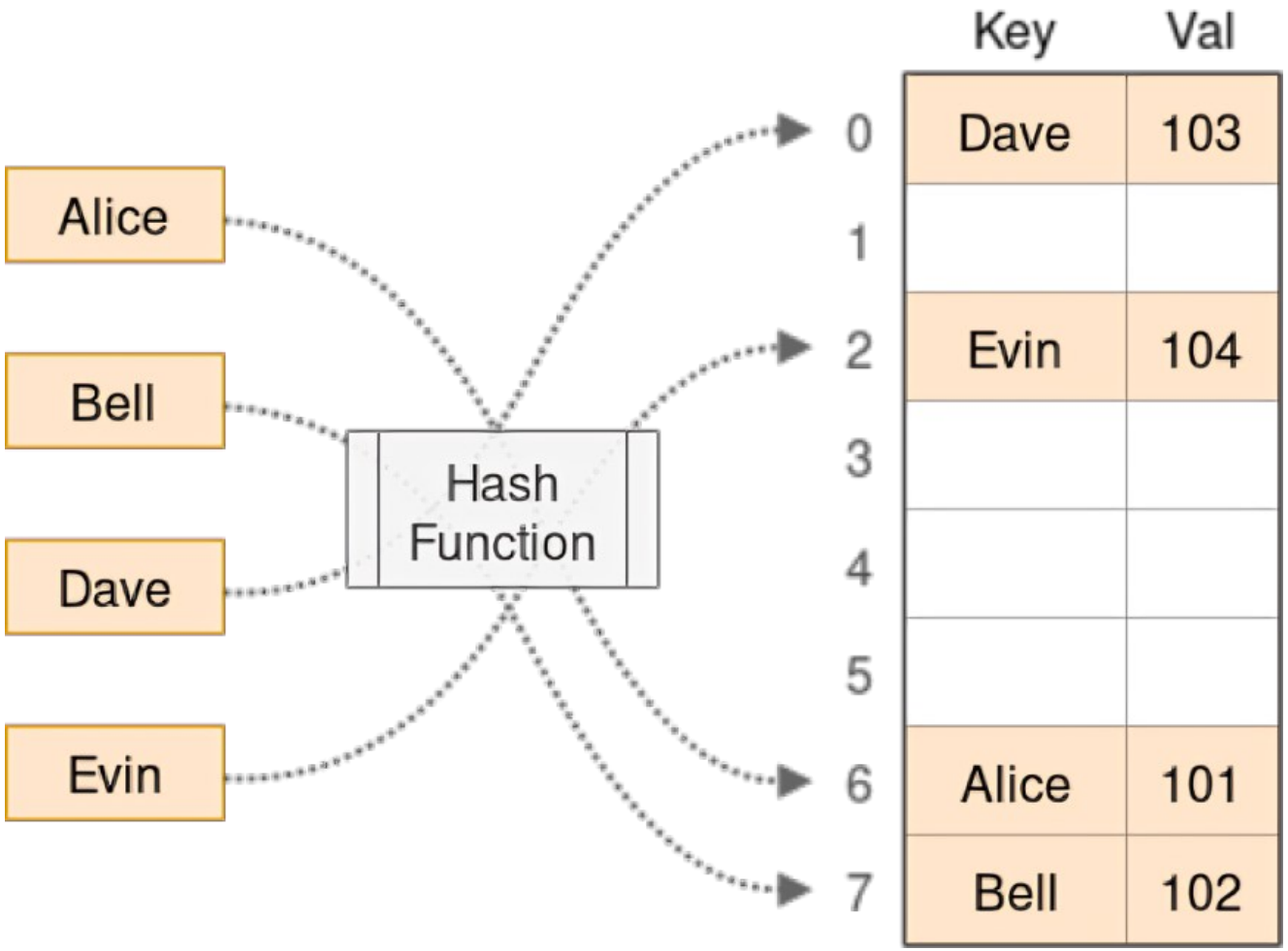
Key
Val
Alice
Bell
Dave
Evin
Hash Function
0
1
2
3
4
5
6
7
Dave
103
Evin
104
Alice
101
Bell
102

Hashing

- Hashing is a technique used to implement hash tables.

- Great technique to perform
  - Insertions
  - Deletions
  - Searching

  O(1)

Hashing

- Hashing is a technique used to implement hash tables.

- Great technique to perform
  - Insertions
  - Deletions
  - Searching

  O(1)

- Not efficient in operations like
  - findMax
  - findMin
  - Print data (the entire table) in sorted order

  Not great when ordering is required

General Idea

- Hash Table is merely an array of fixed-size containing items.
  - size of the table as $TableSize$.
  - Items stored in the table are indexed by $0 \ \ldots \ TableSize - 1$.

General Idea

- Hash Table is merely an array of fixed-size containing items.
  - size of the table as $TableSize$.
  - Items stored in the table are indexed by $0 \ \ldots \ TableSize - 1$.
- *Key*: used to find the index of the associated item in the table.
  - key is mapped to a number (i.e. index) ranging from $0 \ldots TableSize - 1$.

General Idea

- Hash Table is merely an array of fixed-size containing items.
  - size of the table as $TableSize$.
  - Items stored in the table are indexed by $0 \ \ldots \ TableSize - 1$.
- *Key*: used to find the index of the associated item in the table.
  - key is mapped to a number (i.e. index) ranging from $0 \ldots TableSize - 1$.
  - Can be an integer/string/any type.
  - E.g. a Name/ID that is part of a large student database.

General Idea

- Hash Table is merely an array of fixed-size containing items.
  - size of the table as $TableSize$.
  - Items stored in the table are indexed by $0 \ \ldots \ TableSize - 1$.
- *Key*: used to find the index of the associated item in the table.
  - key is mapped to a number (i.e. index) ranging from $0 \ldots TableSize - 1$.
  - Can be an integer/string/any type.
  - E.g. a Name/ID that is part of a large student database.
- The mapping done using Hash Function.

Key Space

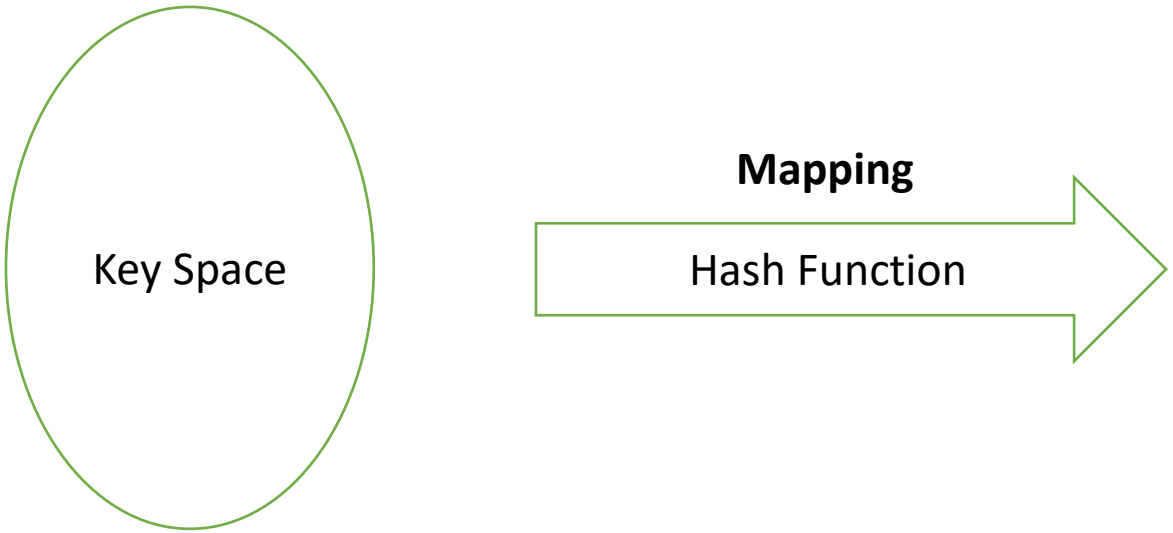
Key Space
Mapping
Hash Function

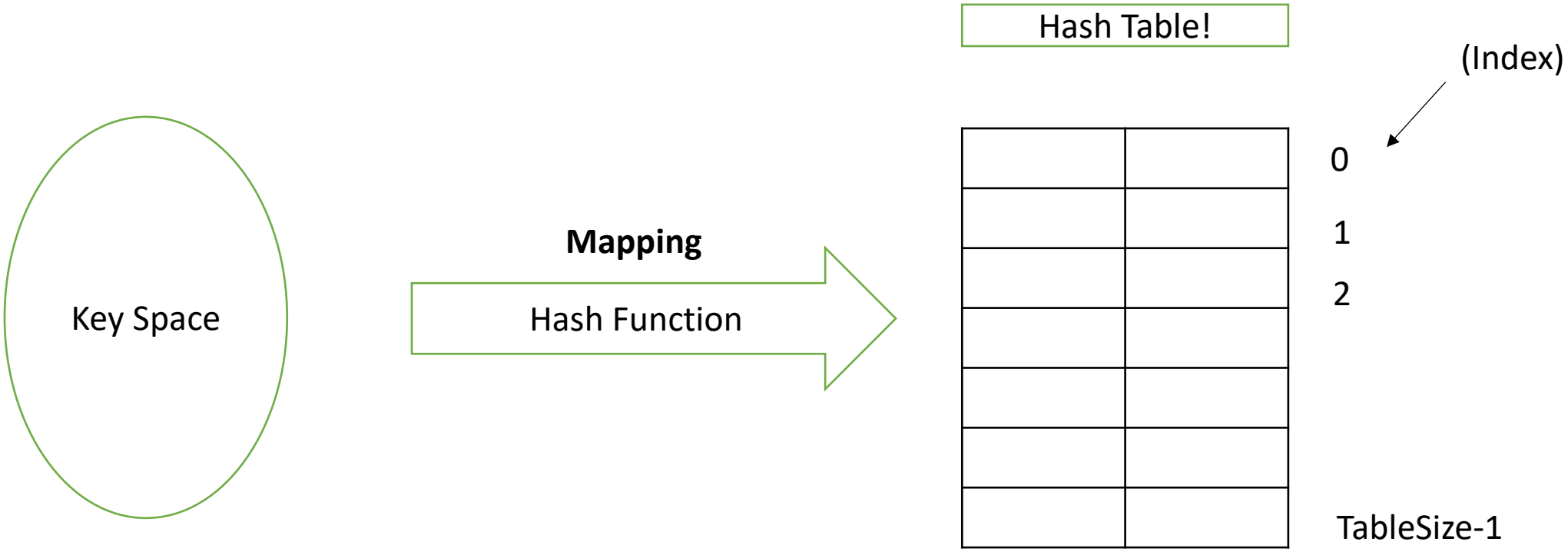
Hash Table!
(Index)
Key Space
Mapping
Hash Function
0
1
2
TableSize-1

Hash Functions

- Maps key to the Hash-table.
- Requirements:
  - Simple to compute (must satisfy O(1))

Hash Functions

- Maps key to the Hash-table.
- Requirements:
  - Simple to compute (must satisfy O(1))
  - Distribute the keys evenly among the cells

Hash Functions

- Maps key to the Hash-table.
- Requirements:
  - Simple to compute (must satisfy O(1))
  - Distribute the keys evenly among the cells
  - Should minimize collisions (happens when multiple keys are mapped to the same index).

Designing Hash functions

- If keys are integers, $(key \% TableSize)$ is a general strategy.

- If the keys are strings, the Hash function needs more care.
  - First needed to be converted into a numeric value.

Hash Functions

- Challenges:
  - Keys may not be numeric.

Hash Functions

- Challenges:
  - Keys may not be numeric.
  - The number of possible keys are much larger than the space available in the table.

Hash Functions

- Challenges:
  - Keys may not be numeric.
  - The number of possible keys are much larger than the space available in the table.
  - Different keys may map into the same location (collision).
    - If there are too many collisions, the performance of hash-table

More Ideas to design Hash functions

- Add up the ASCII values of all characters of the key.

```
int hash(const string &key, int tableSize)
{
        int hasVal = 0;

        for (int i = 0; i < key.length(); i++)
                hashVal += key[i];
        return hashVal % tableSize;
}
```

- Simple to implement and fast.

More Ideas to design Hash functions

- Add up the ASCII values of all characters of the key.

```
int hash(const string &key, int tableSize)
{
        int hasVal = 0;

        for (int i = 0; i < key.length(); i++)
                hashVal += key[i];
        return hashVal % tableSize;
}
```

- Simple to implement and fast.

- However, if the TableSize is large, the function does not distribute keys well.
- E.g. TableSize = 10000, key_length <=8, Hash function can assume values only between 0 and 1016.

$$\text{Hash(key)} = \sum_{i=0}^{keySize-1} key[keySize - i - 1] \times 37^i$$

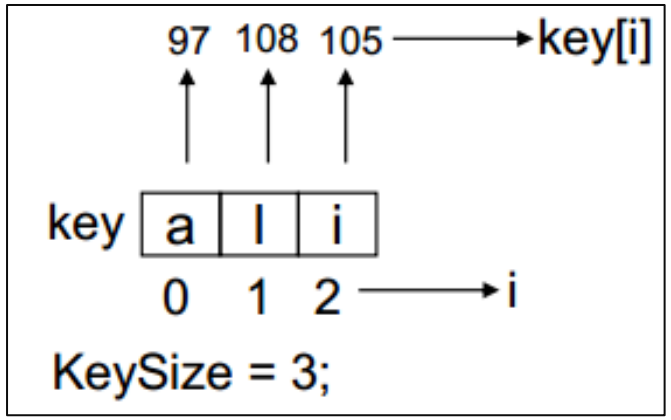

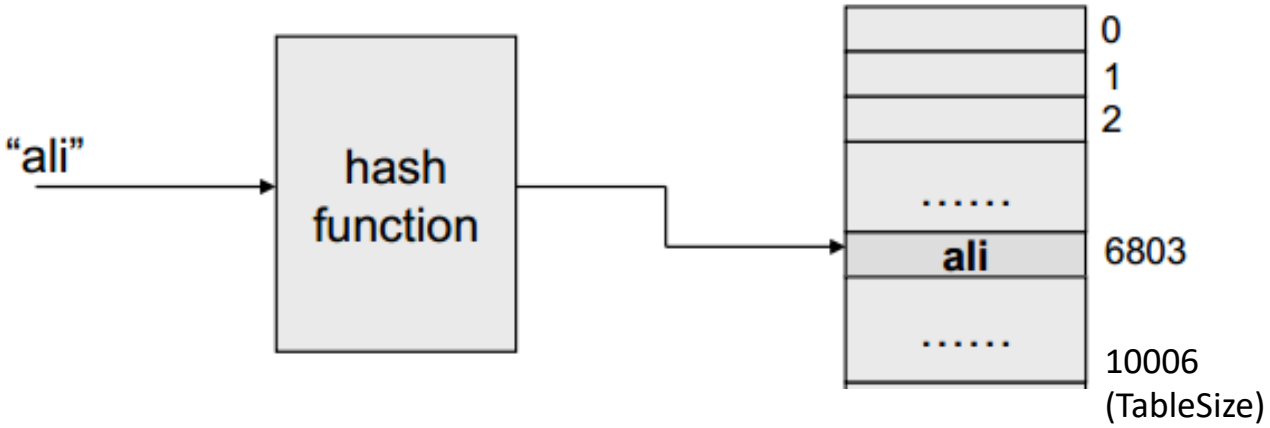

$$Hash('ali') = 105 \times 37^0 + 108 \times 37^1 + 97 \times 37^2 = 6803$$

Collision resolution

- Collision: situations where two keys *hash to the same index*.

Collision resolution

- Collision: situations where two keys *hash to the same index*.

- Collision resolution techniques:
  1. Separate Chaining/ Open Hashing
  2. Open addressing/ Closed Hashing
     i. Linear Probing
     ii. Quadratic Probing
     iii. Double Hashing

Separate chaining

- Idea: maintain individual lists for items that hash to same value.

Separate chaining

hash(key) = key % 10.

Keys: 0, 1, 4, 9, 16, 25, 36, 49, 64, 81

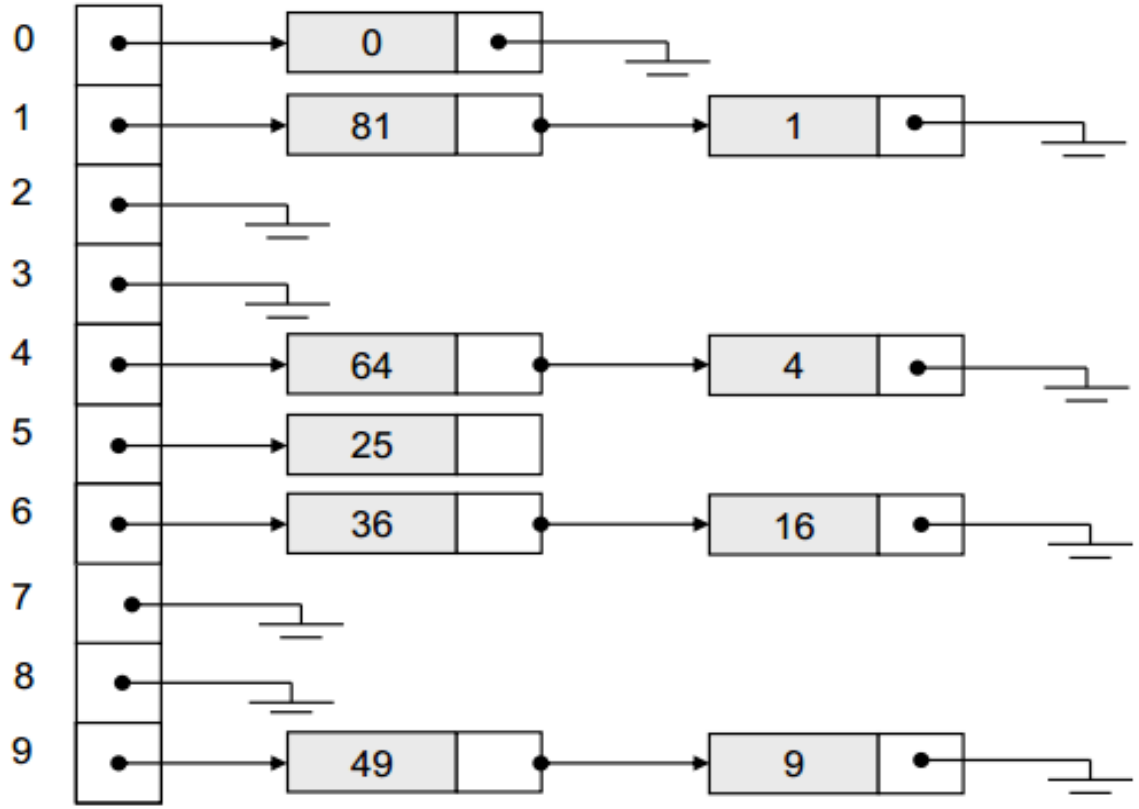

Separate chaining

- Idea: maintain individual lists for items that hash to the same value.
  - What do the elements of the Hash table point to?

Separate chaining

- Idea: maintain individual lists for items that hash to the same value.
  - What do the elements of the Hash table point to?
    - To the first nodes (heads) of each list.

Separate chaining

- Idea: maintain individual lists for items that hash to the same value.
  - What do the elements of the Hash table point to?
    - To the first nodes (heads) of each list.

  - Shall we insert it in the front or back of the list?

Separate chaining

- Idea: maintain individual lists for items that hash to the same value.
  - What do the elements of the Hash table point to?
    - To the first nodes (heads) of each list.

  - Shall we insert it in the front or back of the list?
    - Inserting front is better: O(1)
    - Insert back is possible, but need to maintain a tail pointer for each list (costly).

Separate chaining

- Idea: maintain individual lists for items that hash to the same value.
  - What do the elements of the Hash table point to?
    - To the first nodes (heads) of each list.

  - Shall we insert it in the front or back of the list?
    - Inserting front is better: O(1)
    - Insert back is possible, but need to maintain a tail pointer for each list (costly).

- Advantages:

Separate chaining

- Idea: maintain individual lists for items that hash to the same value.
  - What do the elements of the Hash table point to?
    - To the first nodes (heads) of each list.

  - Shall we insert it in the front or back of the list?
    - Inserting front is better: O(1)
    - Insert back is possible, but need to maintain a tail pointer for each list (costly).

- Advantages:
  - Simple to implement!
  - Can store more items than *TableSize*. (*Never runs out of space!*)

Separate Chaining (Operations)

- How to initialize the Hash Table?

Separate Chaining (Operations)

- How to initialize the Hash Table?
  - Set all entries to NULL.

- How to search:

Separate Chaining (Operations)

- How to initialize the Hash Table?
  - Set all entries to NULL.

- How to search:
  - Locate the cell using the Hash function.
  - Perform a sequential search on the Linked list in the cell.
- Insertion:

Separate Chaining (Operations)

- How to initialize the Hash Table?
  - Set all entries to NULL.

- How to search:
  - Locate the cell using the Hash function.
  - Perform a sequential search on the Linked list in the cell.
- Insertion:
  - Locate the cell using the Hash function.
  - Insert it as the first item in the list.
- Deletion:

Separate Chaining (Operations)

- How to initialize the Hash Table?
  - Set all entries to NULL.

- How to search:
  - Locate the cell using the Hash function.
  - Perform a sequential search on the Linked list in the cell.
- Insertion:
  - Locate the cell using the Hash function.
  - Insert it as the first item in the list.
- Deletion:
  - Locate the cell using the Hash function
  - Delete the item from the Linked list.

- Collisions are very likely.
- What is the average length of the lists?
  - Represented using Load factor (λ)

- Collisions are very likely.
- What is the average length of the lists?
  - Represented using Load factor (λ)

- Load factor (λ) = $\frac{total\ number\ of\ items}{tableSize}$

- What is the maximum load factor for separate chaining?

- Collisions are very likely.
- What is the average length of the lists?
  - Represented using Load factor (λ)

- Load factor (λ) = $\frac{total\ number\ of\ items}{tableSize}$

- What is the maximum load factor for separate chaining?
  - For chaining, λ can be >1.

Separate chaining(cost of searching)

- COST = $O(1)$ to evaluate the Hash function +
  Time needed to traverse the List.

Separate chaining(cost of searching)

- COST = $O(1)$ to evaluate the Hash function +
  Time needed to traverse the List.

- Unsuccessful search: $O(1 + \lambda)$
  - Need to traverse the entire list (compare λ nodes on average.)

Separate chaining(cost of searching)

- COST = $O(1)$ to evaluate the Hash function +
  Time needed to traverse the List.

- Unsuccessful search: $O(1 + \lambda)$
  - Need to traverse the entire list (compare λ nodes on average.)

- Successful search:
  - On average, need to check half of the nodes while searching.
  - Average cost: $\mathrm{O}(1 + \lambda \ / \ 2)$

Chaining (Pros and cons)

- Pros:
  - Simple to implement
  - Hash-table never fills up. Can always add more items.
  - Less sensitive to the hash function and load factor.

Chaining (Pros and cons)

- Pros:
  - Simple to implement
  - Hash-table never fills up. Can always add more items.
  - Less sensitive to the hash function and load factor.
  - Widely used when it is unknown how many and how frequently keys may be inserted or deleted.

Chaining (Pros and cons)

- Pros:
  - Simple to implement
  - Hash-table never fills up. Can always add more items.
  - Less sensitive to the hash function and load factor.
  - Widely used when it is unknown how many and how frequently keys may be inserted or deleted.

- Cons:
  - Some parts of the hash table may never be used (bad distribution)

Chaining (Pros and cons)

- Pros:
  - Simple to implement
  - Hash-table never fills up. Can always add more items.
  - Less sensitive to the hash function and load factor.
  - Widely used when it is unknown how many and how frequently keys may be inserted or deleted.

- Cons:
  - Some parts of the hash table may never be used (bad distribution)
  - If the chain becomes long, search time becomes O(n) in worst case.

Chaining (Pros and cons)

- Pros:
  - Simple to implement
  - Hash-table never fills up. Can always add more items.
  - Less sensitive to the hash function and load factor.
  - Widely used when it is unknown how many and how frequently keys may be inserted or deleted.

- Cons:
  - Some parts of the hash table may never be used (bad distribution)
  - If the chain becomes long, search time becomes O(n) in worst case.
  - Use extra space for links.

Hashing: Open Addressing

Collision resolution with open addressing

- In Open addressing, all the items go inside the table.
  - No chain is maintained.

Collision resolution with open addressing

- In Open addressing, all the items go inside the table.
  - No chain is maintained.

- Bigger table may be needed.
  - Generally Load factor (λ) should be $<= 0.5$.

Collision resolution with open addressing

- In Open addressing, all the items go inside the table.
  - No chain is maintained.

- Bigger table may be needed.
  - Generally Load factor (λ) should be $<= 0.5$.

- Collision can still occur!
  - *Alternative cells are tried until an empty cell is found.*

Open addressing

Cells $h_0(x)$, $h_1(x)$, $h_2(x)$ … are tried in succession, where

$$h_i(x) = \left(x + f(i)\right) \% \, TableSize, with \; f(0) = 0$$

- The function $f(i)$ is the collision resolution strategy.

Open addressing

Cells $h_0(x)$, $h_1(x)$, $h_2(x)$ … are tried in succession, where

$$h_i(x) = \left(x + f(i)\right) \% \, TableSize, with \; f(0) = 0$$

- The function $f(i)$ is the collision resolution strategy.

- Common collision resolution strategies:
  - Linear Probing
  - Quadratic Probing
  - Double Hashing

Linear Probing

- Sequentially searching the table until an empty cell is found.
  - $f(i) = i$

Linear Probing

- Sequentially searching the table until an empty cell is found.
  - $f(i) = i$
- Example:
  - Insert items with keys $89, 18, 49, 58, 9$ into an empty hash table.
  - Table size is 10.

Linear Probing

- Sequentially searching the table until an empty cell is found.
  - $f(i) = i$
- Example:
  - Insert items with keys $89, 18, 49, 58, 9$ into an empty hash table.
  - Table size is 10.

  - Insert 89: $(89 + f(0))\ \%\ 10 = (89 + 0)\ \%\ 10 = 9$

Linear Probing

- Sequentially searching the table until an empty cell is found.
  - $f(i) = i$
- Example:
  - Insert items with keys $89, 18, 49, 58, 9$ into an empty hash table.
  - Table size is 10.

  - Insert 89: $(89 + f(0))\ \%\ 10 = (89 + 0)\ \%\ 10 = 9$

  - Insert 59: $(59 + f(0))\ \%10\ = (59 + 0)\ \%10 = 9$
    $i = 1,\ (59\ +\ f(1))\ \%10\ =\ 59 + 1\ \%10\ =\ 0$

Linear Probing

- Sequentially searching the table until an empty cell is found.
  - $f(i) = i$
- Example:
  - Insert items with keys $89, 18, 49, 58, 9$ into an empty hash table.
  - Table size is 10.

  - Insert 89: $(89 + f(0))\ \%\ 10 = (89 + 0)\ \%\ 10 = 9$

  - Insert 59: $(59 + f(0))\ \%10\ = (59 + 0)\ \%10 = 9$
    $i = 1,\ (59\ +\ f(1))\ \%10\ =\ 59 + 1\ \%10\ =\ 0$
  - Insert 69:
    - $69 + f(0)\ \%10 = 9$
    - $69 + f(1)\ \%10 = 0$
    - $69 + f(2)\ \%10 = 1$

	Empty Table
0	
1	
2	
3	
4	
5	
6	
7	
8	
9	

Figure 5.11 Hash table with linear probing, after each insertion

```
hash ( 89, 10 ) = 9
```

	Empty Table	After 89
0		
1		
2		
3		
4		
5		
6		
7		
8		
9		89

Figure 5.11 Hash table with linear probing, after each insertion

```
hash ( 89, 10 ) = 9
hash ( 18, 10 ) = 8
```

	Empty Table	After 89	After 18
0			
1			
2			
3			
4			
5			
6			
7			
8			18
9		89	89

Figure 5.11 Hash table with linear probing, after each insertion

```
hash ( 89, 10 ) = 9
hash ( 18, 10 ) = 8
hash ( 49, 10 ) = 9
```

	Empty Table	After 89	After 18	After 49
0				49
1				
2				
3				
4				
5				
6				
7				
8			18	18
9		89	89	89

Figure 5.11 Hash table with linear probing, after each insertion

```
hash ( 89, 10 ) = 9
hash ( 18, 10 ) = 8
hash ( 49, 10 ) = 9
hash ( 58, 10 ) = 8
```

	Empty Table	After 89	After 18	After 49	After 58
0				49	49
1					58
2					
3					
4					
5					
6					
7					
8			18	18	18
9		89	89	89	89

Figure 5.11 Hash table with linear probing, after each insertion

```
hash ( 89, 10 ) = 9
hash ( 18, 10 ) = 8
hash ( 49, 10 ) = 9
hash ( 58, 10 ) = 8
hash (  9, 10 ) = 9
```

	Empty Table	After 89	After 18	After 49	After 58	After 69
0				49	49	49
1					58	58
2						69
3						
4						
5						
6						
7						
8			18	18	18	18
9		89	89	89	89	89

Figure 5.11 Hash table with linear probing, after each insertion

Linear probing (clustering problem)

- If the table is big enough, a free cell can always be found.
  - The time to find that space can get quite long!

Linear probing (clustering problem)

- If the table is big enough, a free cell can always be found.
  - The time to find that space can get quite long!

- Even if the table is relatively empty, blocks of occupied cells start forming.
  - a.k.a '*primary clustering*'.

Linear probing (clustering problem)

- If the table is big enough, a free cell can always be found.
  - The time to find that space can get quite long!

- Even if the table is relatively empty, blocks of occupied cells start forming.
  - a.k.a '*primary clustering*'.

- Any key that hashes into the cluster will require several attempts to resolve the collision.
  - Then it gets added to the cluster ☹

Analysis of insertion, search

- Avg #of cells examined in an insertion in linear probing

$$= \frac{1}{2}\left(1 + \frac{1}{(1-\lambda)^2}\right)$$

(Proof is beyond the scope of this lecture ☹)

Analysis of insertion, search

- Avg #of cells examined in an insertion in linear probing

$$= \frac{1}{2}(1 + \frac{1}{(1-\lambda)^2})$$

(Proof is beyond the scope of this lecture ☹)

- If $\lambda = 0.5$, avg comparison for insertion is 2.5.
- $\lambda = 0.75$: 8.5 comparisons expected!
- $\lambda = 0.9$: the 50 !!

Quadratic probing

- Eliminates the primary clustering problem of Linear probing.
- Collision function is quadratic.
- Popular choice is $f(i)$=i^2, $\mathrm{i} = 0,1,2, \ldots \mathrm{N}$

- If the hash function evaluates to ‘h’, and that cell is already occupied, then try cells $h + 1^2$, $h + 2^2$, $h + 3^2$ …

Quadratic probing

- Eliminates the primary clustering problem of Linear probing.
- Collision function is quadratic.
- Popular choice is $f(i)$=i^2, $\mathrm{i} = 0,1,2, \ldots \mathrm{N}$

- If the hash function evaluates to ‘h’, and that cell is already occupied, then try cells $h + 1^2$, $h + 2^2$, $h + 3^2$ …

- i.e. it examines cells 1, 4, 9 and so on cells away from the original probe.

After insert 89

0	
1	
2	
3	
4	
5	
6	
7	
8	
9	89

- Insert 89:
  - $hash_i(x) = \left(x + f(i)\right) mod\ TableSize,$
  - $f(i) = i^2,\ f(0) = 0\ , TableSize = 10$
  - $hash_0(89) = (89 + 0)\ \%\ 10 = 9$
  - No collision at index-9. So insert there.

	After insert 89	After insert 18
0		
1		
2		
3		
4		
5		
6		
7		
8		18
9	89	89

- Insert 18:
  - $hash_0(18) = (18 + 0)\ \%\ 10 = 8$
  - No collision at index-8. So insert there.

	After insert 89	After insert 18	After insert 49
0			49
1			
2			
3			
4			
5			
6			
7			
8		18	18
9	89	89	89

- Insert 49:
  - $hash_0(49) = (49 + 0)\ \%\ 10 = 9$
  - Collision at index-9.

  - Try $i = 1, f(1) = 1^2 = 1$
  - $hash_1(49) = (49 + 1)\ \%\ 10 = 0$
  - No collision at index-0. Insert there.

	After insert 89	After insert 18	After insert 49	After insert 58
0			49	49
1				
2				58
3				
4				
5				
6				
7				
8		18	18	18
9	89	89	89	89

- Insert 58:
  - $hash_0(58) = (58 + 0)\ \%\ 10 = 8$
  - Collision at index-8.

  - Try $i = 1, f(1) = 1^2 = 1$
  - $hash_1(58) = (58 + 1)\ \%\ 10 = 9$
  - Collision at index-9.

  - Try $i = 2, f(2) = 2^2 = 4$
  - $hash_2(58) = (58 + 4)\ \%\ 10 = 2$
  - No collision at index-2. Insert there.

	After insert 89	After insert 18	After insert 49	After insert 58	After insert 9
0			49	49	49
1					
2				58	58
3					9
4					
5					
6					
7					
8		18	18	18	18
9	89	89	89	89	89

- Insert 9:
  - $hash_0(9) = (9 + 0)\ \%\ 10 = 9$
  - Collision at index-9.

  - Try $i = 1, f(1) = 1^2 = 1$
  - $hash_1(9) = (9 + 1)\ \%\ 10 = 0$
  - Collision at index-0.

  - Try $i = 2, f(2) = 2^2 = 4$
  - $hash_2(9) = (9 + 4)\ \%\ 10 = 3$
  - No collision at index-3. Insert there.

Quadratic probing

- Problem:
  - No guarantee to find an empty space if $\lambda \geq 0.5$.
  - If the hash TableSize is not prime, the problem gets much severe!

Quadratic probing

- Problem:
  - No guarantee to find an empty space if $\lambda \geq 0.5$.
  - If the hash TableSize is not prime, the problem gets much severe!

- One theorem says:
  - If the tableSize is prime and $\lambda < 0.5$, all probes will be to different locations and an item can always be inserted.

Some considerations

- What happens when λ is too high:
  - Dynamically expand the table when $\lambda > 0.5$, a.k.a ‘re-hashing’.
    - Double the TableSize to a prime number.
    - While expanding the hash table, re-insert in the new table with a new hash-function.

Some considerations

- What happens when λ is too high:
  - Dynamically expand the table when $\lambda > 0.5$, a.k.a 're-hashing'.
    - Double the TableSize to a prime number.
    - While expanding the hash table, re-insert in the new table with a new hash-function.

- Although Quadratic Probing solves the primary clustering, elements that hash to the same location will probe to the same alternative cells (a.k.a 'Secondary clustering').
  - Btw, this is very less likely to occur.

Double hashing

- Second hash-function is used to solve the collision.

$$f(i) = i \times hash_2(x)$$

Double hashing

- Second hash-function is used to solve the collision.

$$f(i) = i \times hash_2(x)$$

- We apply a second hash function to x and probe at a distance:

$$1 \times hash_2(x), 2 \times hash_2(x) \ldots and\ so\ on.$$

Double hashing

- Second hash-function is used to solve the collision.

$$f(i) = i \times hash_2(x)$$

- We apply a second hash function to x and probe at a distance:

$$1 \times hash_2(x), 2 \times hash_2(x) \ldots and\ so\ on.$$

- The function $hash_2(x)$ should never evaluate to Zero. Why?

Double hashing

- Second hash-function is used to solve the collision.

$$f(i) = i \times hash_2(x)$$

- We apply a second hash function to x and probe at a distance:

$$1 \times hash_2(x), 2 \times hash_2(x) \ldots and\ so\ on.$$

- The function $hash_2(x)$ should never evaluate to Zero. Why?
  - E.g. let $hash_2(x) = x\ mod\ 9$, and try to insert 99 in the previous example.

Double hashing

- Second hash-function is used to solve the collision.

$$f(i) = i \times hash_2(x)$$

- We apply a second hash function to x and probe at a distance:

$$1 \times hash_2(x), 2 \times hash_2(x) \ldots and\ so\ on.$$

- The function $hash_2(x)$ should never evaluate to Zero. Why?
  - Let $hash_2(x) = x\ mod\ 9$, and try to insert 99 in the previous example.

- A function such as $hash_2(x) = R - (x\ mod\ R)$ will work!
  - where $R\ is\ a\ prime\ number\ <\ TableSize$.
  - E.g. try $R = 7$ for the previous example. $(7 - (x\ mod\ 7))$.

	Empty Table
0	
1	
2	
3	
4	
5	
6	
7	
8	
9	

Figure 5.18 Hash table with double hashing, after each insertion

- $hash_i(x) = \left(x + f(i)\right) mod\ 10$
- $f(i) = i \times hash_2(x), f(0) = 0$
- $hash_2(x) = R - (x\ mod\ R)$
- Let, $R = 7$
- $hash_2(x) = 7 - (x\ mod\ 7)$

	Empty Table	After 89
0		
1		
2		
3		
4		
5		
6		
7		
8		
9		89

Figure 5.18 Hash table with double hashing, after each insertion

- Insert 89:
  - $hash_i(x) = \left(x + f(i)\right) mod\ 10$
  - Initially $i = 0\ , f(0) = 0$

  - $hash_0(89) = (89 + 0)\ \%\ 10 = 9$
  - No collision. So insert at index-9 of hash-table.

	Empty Table	After 89	After 18
0			
1			
2			
3			
4			
5			
6			
7			
8			18
9		89	89

Figure 5.18 Hash table with double hashing, after each insertion

- Insert 18:
  - $hash_0\ (18) = (18 + 0)\ \%\ 10 = 8$
  - No collision. So insert at index-8 of hash-table.

	Empty Table	After 89	After 18	After 49
0				
1				
2				
3				
4				
5				
6				49
7				
8			18	18
9		89	89	89

Figure 5.18 Hash table with double hashing, after each insertion

- Insert 49:
  - $hash_0(49) = (49 + 0)\ \%\ 10 = 9$
  - Collision at Index-9
  - Use $f(i) = i * hash_2(x)$ as collision resolution function.

  - First attempt, $i = 1$.
  - $hash_2(x) = 7 - (x\ mod\ 7)$
    $= 7 - (49\ mod\ 7)$
    $= 7 - 0 = 7$

  - $f(1) = 1 * hash_2(x) = 7$
  - $hash_1(89)$
    $= \left(89 + f(1)\right) mod\ 10$
    $= (89 + 7)\ \%\ 10 = 6$

  - No collision at index-6.

	Empty Table	After 89	After 18	After 49	After 58
0					
1					
2					
3					58
4					
5					
6				49	49
7					
8			18	18	18
9		89	89	89	89

Figure 5.18 Hash table with double hashing, after each insertion

- Insert 58:
  - $hash_0(58) = (58 + 0)\ \%\ 10 = 8$
  - Collision at index-8

  - For first attempt, $i = 1$
  - $hash_2(x) = 7 - (x\ mod\ 7)$
    $= 7 - (58\ mod\ 7)$
    $= 7 - 2 = 5$

  - $hash_1(58)$
    $= \big(58 + f(1)\big)\ mod\ 10$
    $= (58 + 5)\ \%\ 10 = 3$

  - No collision at index-3

	Empty Table	After 89	After 18	After 49	After 58	After 69
0						69
1						
2						
3					58	58
4						
5						
6				49	49	49
7						
8			18	18	18	18
9		89	89	89	89	89

Figure 5.18 Hash table with double hashing, after each insertion

- Insert 69:
  - $hash_0(69) = (69 + 0)\ \%\ 10 = 9$
  - Collision at index-9.
  - $hash_2(69)$
    $= 7 - (69\ mod\ 7)$
    $= 7 - 6 = 1$
  - $hash_1(69)$
    $= \big(69 + f(1)\big)\ mod\ 10$
    $= (69 + 1)\ \%\ 10 = 0$
  - No collision at index-0

** However, if collision occurred for $i = 1$, we need to recalculate $hash_2(x)$ for $i = 2$

Summary

- Hash tables can be used to implement the insert and find operations in O(1).
- It depends on the Load factor (□), not on the number of elements (N).
- It is important to have a prime TableSize and a correct choice of Load-factor and Hash-function.
- For Separate chaining, □ should be close to 1.
- For Open addressing, □ should not exceed 0.5, unless this will slow down the entire process.
- Re-hashing can be implemented to grow (or shrink) the table.

References

Thank you